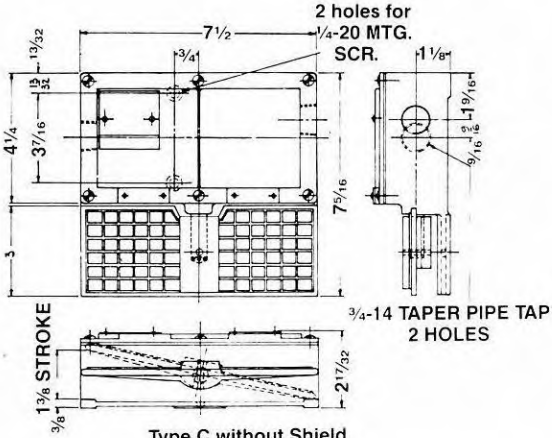

Type C without Shield
Lbs. Boxed—5

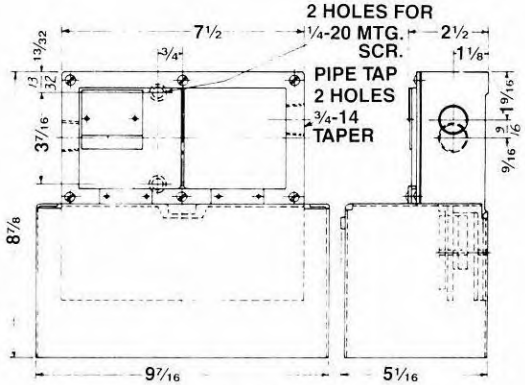

Type C with Shield
Lbs. Boxed—6